Diritti riservati All rights reserved

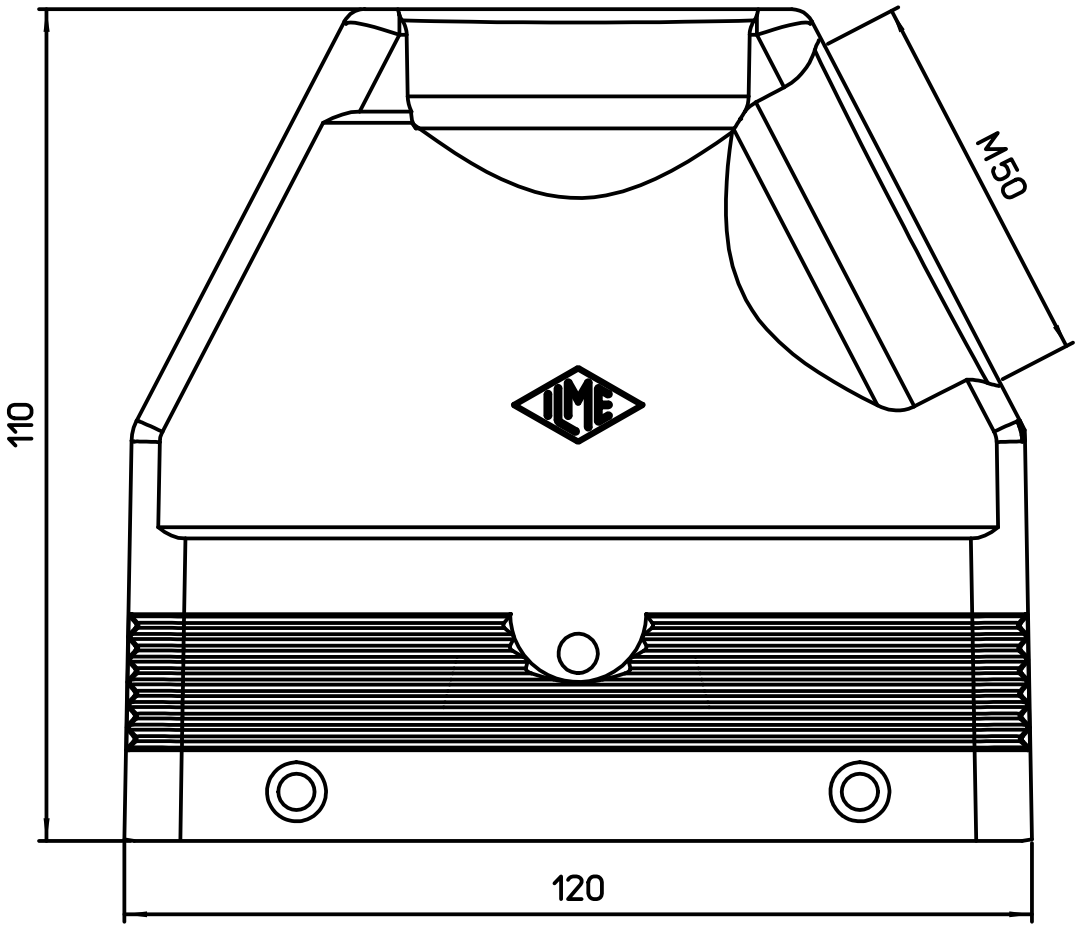

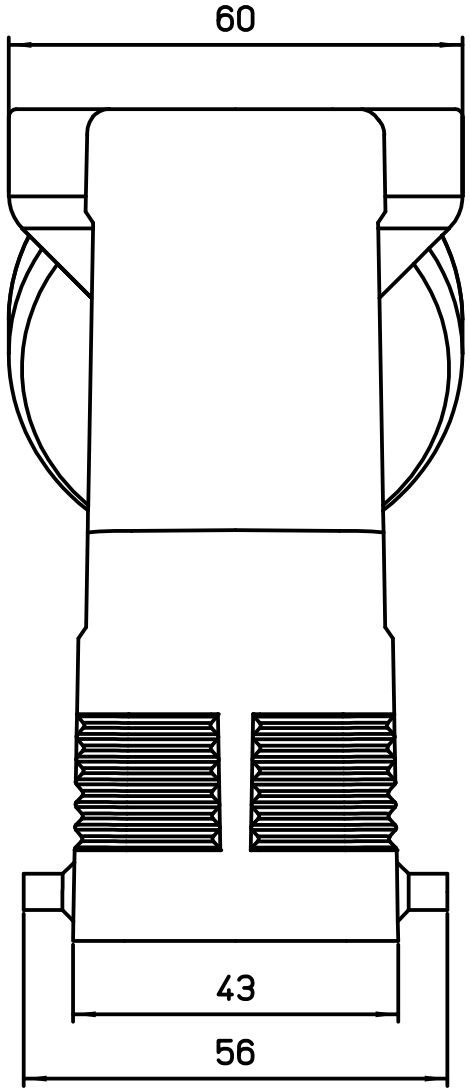

dimensions in mm	
Date	29/06/16
Sign.	D. Bonino

MIOW 24.50

Hood side entry M50 - AE

Scale 1:1